A Radial Basis Function Network for Adaptive Channel Equalization in Coherent Optical OFDM Systems

Gurpreet Kaur[1], Gurmeet Kaur[2]
[1]*Department of Electronics and Communication Engineering, Punjabi University, Patiala, India*
[2]*Department of Electronics and Communication Engineering, Punjabi University, Patiala, India*
[1]dhammu.gurpreet836@gmail.com
[2]farishta02@yahoo.co.in

***Abstract*— Artificial neural network based equalizers can be used for equalization in coherent optical OFDM systems. The artificial neural network based multilayer layer perceptron is a feed-forward network consists of one hidden layer with one or more hidden nodes between its input and output layers and can be trained by using back propagation algorithm. However, this algorithm suffers from slow convergence rate, depending on the size of artificial neural network. The training function can update the weights and the bias values according to the resilient back-propagation algorithm, which is computationally more efficient than other training algorithms, and it performs an approximation to the global minimization. It has been seen that an optimal equalizer based on maximum a-posterior probability (MAP) criterion can be implemented using Radial basis function network. In a RBF equalizer, centres are fixed using K-mean clustering and weights are trained using LMS algorithm. RBF equalizer can mitigate ISI interference effectively providing minimum BER plot. In this paper A Radial Basis Function network for adaptive channel equalization in Coherent Optical OFDM Systems has been presented its result has been compared with MLP based artificial neural network.**

***Keywords*— Artificial Neural Network (ANN), Bit Error Rate (BER), Coherent Optical Orthogonal Frequency Division Multiplexing (CO-OFDM), Radial Basis Function (RBF).**

I. INTRODUCTION

In order to satisfy the ever increasing demand for the bandwidth requirement the coherent optical orthogonal frequency division multiplexing (CO-OFDM) scheme is being considered as a promising technique of the optical communication system since it has the merits of both a coherent system and an OFDM system [1]. The OFDM modulation scheme leads to a high spectral efficiency because of its partially overlapping subcarriers able to virtually eliminate inter-symbol interference (ISI) caused by the fiber chromatic dispersion (CD) and polarization mode dispersion (PMD) [1, 3]. One major drawback of a CO-OFDM system is that it is very much sensitive to fiber nonlinearity such as self-phase modulation (SPM) and cross-phase modulation (XPM). The conventional approach to communication channel equalization is based on adaptive linear system theory. Equalization is a technique used to remove inter-symbol interference (ISI) produced due to the limited bandwidth of the transmission channel [4]. Volterra series based nonlinear equalizer can compensate alteration introduced by the fiber nonlinearity [5]. The nonlinear system identification based on Volterra models can be carried out in frequency domain or in time domain or in combined time-frequency domain. Most of the time, last approach has been adopted for simplicity, since convolutions with the fiber linear impulse response are performed in the frequency domain and squaring operations are carried out in the time domain [6, 7], But the main disadvantage of Volterra series is its complexity which can be reduced by removing its “unimportant” coefficients. The resulting Volterra system is called the sparse Volterra system model [8].

The Wiener-Hammerstein model is another popular nonlinear signal processing technique with a simpler structure to compensate nonlinear distortion in optical communication systems. Wiener-Hammerstein model is one of the commonly used block-oriented nonlinear structures [9], which comprises a cascading connection of a linear system, a memory less nonlinearity system and a second linear system.

For a time and frequency-varying channel, e.g. single-mode fiber (SMF), equalization based on linear filters is a non-optimum classification strategy because of the linear decision boundaries of the filters [10].An alternative approach would be based on equalizers with nonlinear decision boundaries, such as artificial neural networks (ANNs) based on a multilayer perceptron (MLP). ANN-based NLE for a single-polarization 16-QAM CO-OFDM system is used, which was a first step toward the implementation of an ANN-based NLE for dual-polarization CO-OFDM. Problems encountered using ANN based MLP in equalization are the slow rate of convergence and the possibility that the net does not reach the true minimum mean square error MSE [11]. RBF based equalizer performs better than that of MLP based equalizer at high SNR. Moreover, RBF converges faster than that of MLP in the training mode but needs more computational time in the decision directed mode, because of its large number of neurons compared with the MLP [12, 13].

The remainder of this paper has been organized as follows. Second section presents the theory of an optimal equalizer based on maximum a-posterior probability (MAP) criterion using Radial basis function network, in third section the simulation model

has been outlined. Simulation results have been discussed and compared with other techniques of equalization in section forth. The conclusion has been presented in section fifth.

II. Radial Basis Function Network

The RBF network was originally developed for interpolation in multidimensional space [14]. The schematic of this RBF network with m inputs and a scalar output is presented in Fig. 1. This network can implement a mapping $F_{rbf} : R^m \rightarrow R$ by the function in equation (i) [14]:

$$y = F_{rbf}\{S\} = \sum_{i=1}^{n} w_i \, \psi(\|S_i - C_i\|) \tag{i}$$

Where $S \in R^m$ is the input vector $s_i := [s_1, s_2 \ldots\ldots s_n]^T \in R^n$, $\psi(\cdot)$ is the given function from R^+ to $R, w_i, 1 \leq i \leq n$ are weights and $c_i \in R^m$ are known as RBF centres. The centres of the RBF networks are updated using k-means clustering algorithm. This RBF structure can be extended for multidimensional output as well. Gaussian kernel is the most popular form of kernel function for equalization application, it can be represented as shown in equation (ii).

$$\psi(y) = exp\left(\frac{y}{-\sigma_r^2}\right) \tag{ii}$$

Here, the parameter σ_r^2 controls the radius of influence of each basis functions and determines how rapidly the function approaches 0 with γ.

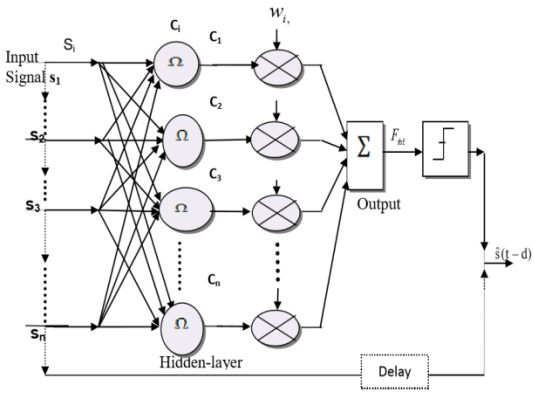

Fig. 1 Radial Basis Function Network Architecture [15]

The output layer weights can be trained using popular stochastic gradient LMS algorithm. The RBF networks are far easier to train compared to multilayer neural networks, since the training of center's radius parameter and the weights can be done sequentially. The main characteristic of the RBF network is that it offers a nonlinear mapping, maintaining at the same time its linearity in parameter structure at the output layer. The RBF equaliser can provide optimal performance with small training sequences but they suffer from computational complexity.

III. Simulation Setup

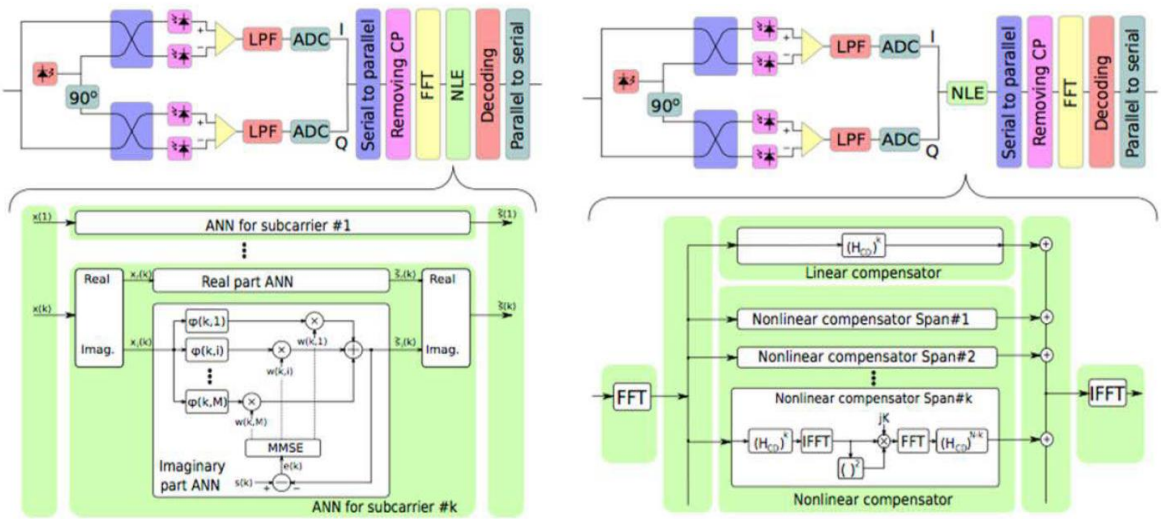

Fig. 2 16-QAM CO-OFDM receiver block diagram showing the equalization schematic diagrams [16]

It has been found that the CO-OFDM modem simulation model shown in Fig. 2 can be widely accepted in both theoretical simulations and experimental measurements [16]. In this paper MLP-based ANN has been replaced by RBF. Radial Basis Function network technique of fiber nonlinearity compensation has been validated by carrying out numerical simulations in MATLAB.

Various transceiver parameters for the CO-OFDM transmission model have been summarized in Table 1.

TABLE I Transceiver parameters for the CO-OFDM transmission model

Parameter	Value
Bit Rate	80Gb/s
Operating Wavelength	1550nm
Fiber Length	200-1000km
Modulation Technique	16-QAM
Cyclic Prefix Overhead	25%
Number of OFDM subcarriers	64
Clipping Ratio	13dB
Chromatic Dispersion	17ps/nm/km
Polarization Mode Dispersion	0.1ps/km$^{(1/2)}$
Fiber Loss	0.2dB/km
Nonlinear kerr coefficient	2.6x10^{-20} m^2/w
Photo Detector	PIN

IV. SIMULATION RESULTS

The results obtained without equalizer, with different types of equalizer by performing various experiments, have been summarized in Fig. 3 to Fig. 12. In the Fig.3 to Fig.10 various scatter plots has been presented.

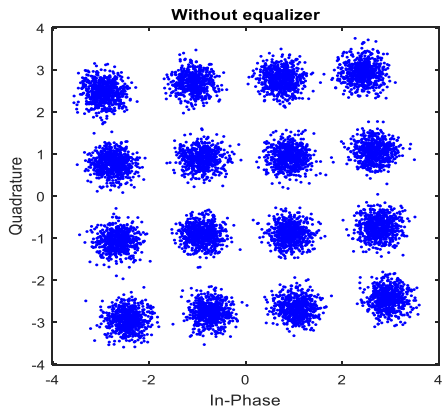

Fig.3 Scatter plot of CO-OFDM without Equalizer

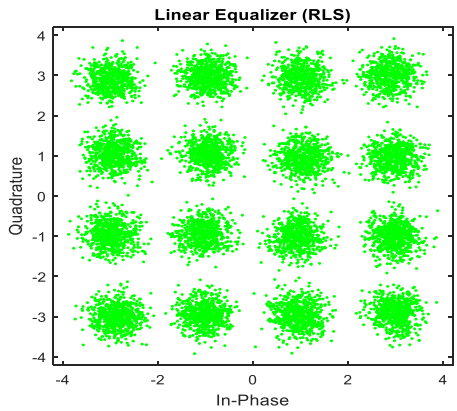

Fig.4 Scatter plot of CO-OFDM with linear (RLS) Equalizer

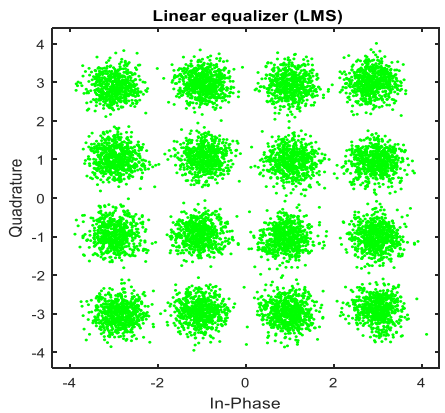

Fig.5 Scatter plot of CO-OFDM with linear (LMS) Equalizer

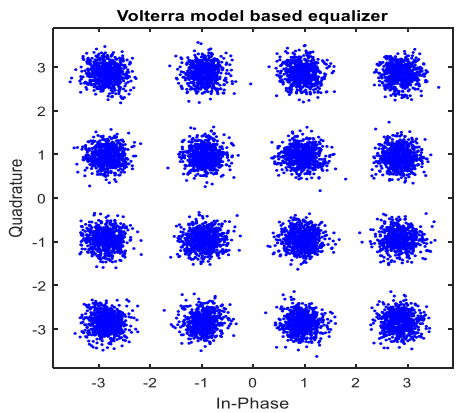

Fig.6 Scatter plot of CO-OFDM with Volterra based Equalizer

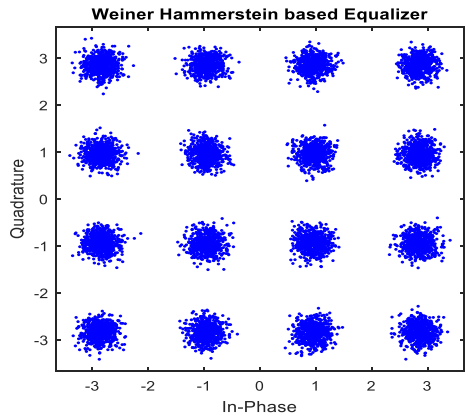

Fig.7 Scatter plot of CO-OFDM Weiner Hammerstein Equalizer

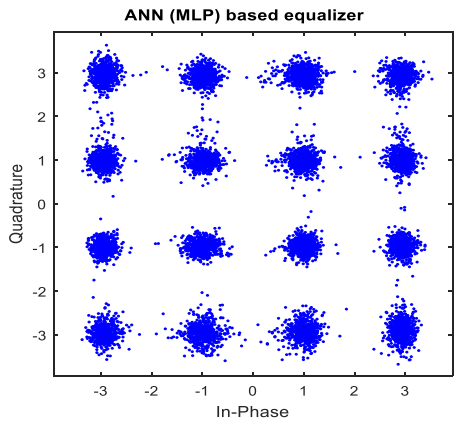

Fig.8 Scatter plot of CO-OFDM with ANN based Equalizer

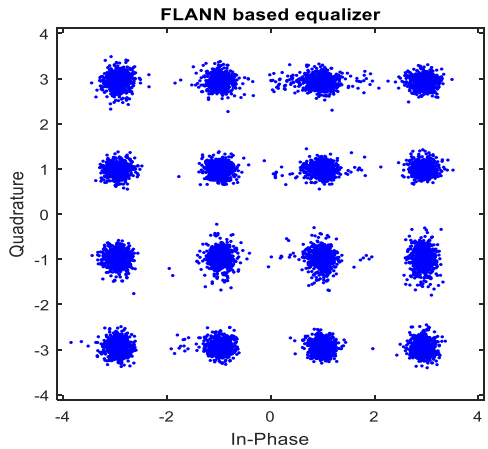

Fig.9 Scatter plot of CO-OFDM with FLANN based Equalizer

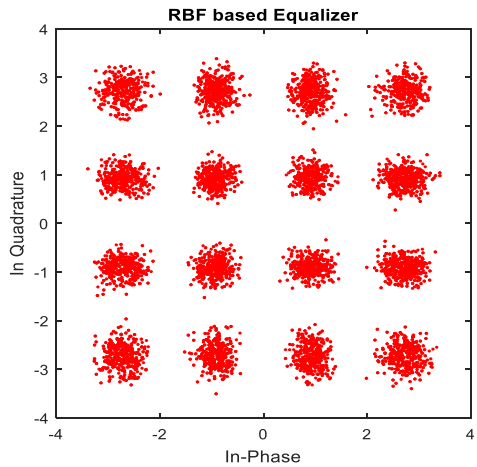

Fig.10 Scatter plot of CO-OFDM with RBF based Equalizer

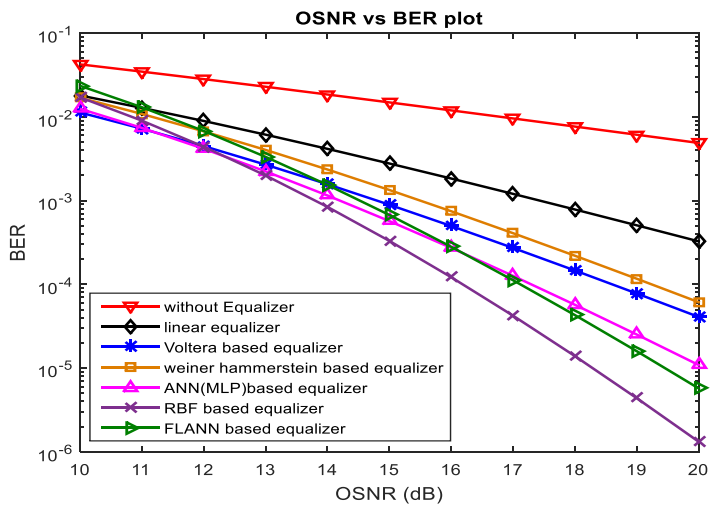

Fig. 11 Bit Error Rate (BER) versus OSNR (dB) for 1000km fiber length

Fig. 11 shows the Bit error rate (BER) versus OSNR in dB without equalizer and with different equalizers on fiber length of 1000km at typical dispersion value of 17ps/nm-km. With the 50% change in OSNR (i.e., 10dB to 20 dB), the percentage change in BER is 88.47%, 98.19%, 99.63%, 99.65%, 99.91%, 99.99% and 99.97% for without equalizer, linear RLS, Volterra Series, Weiner Hammerstein, ANN, RBF and FLANN based equalizer respectively. This Figure shows that with the increase in value of OSNR, the BER improvement is more in RBF as compared to all other techniques of equalization.

Fig. 12 shows the Q-factor versus payload bit rate (Gb/s) without equalizer and with different equalizers on fiber length of 1000km at typical dispersion value of 17ps/nm-km. With the 50% change in payload bit rate (i.e., 40Gb/s to 80Gb/s), the

percentage change in Q factor is 73.71%, 62.59%, 55.196%, 48.64%, 45.67%, 39.21% and 42.25% for without equalizer, linear RLS, Volterra Series, Weiner Hammerstein, ANN, RBF and FLANN based equalizer respectively. This figure shows that with the increase in value of payload, the Q factor improvement is more in RBF as compared to all other techniques of equalization.

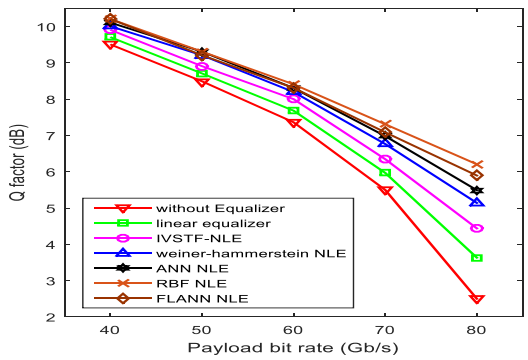

Fig.12 Q - factor versus Payload bit rate (Gb/s) at 1000km fiber length

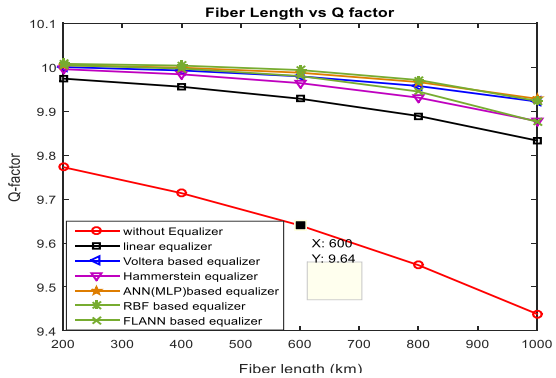

Fig.13 Q- factor versus Fiber Length (km) at 40Gb/s Bit Rate

Fig. 13 shows the Q-factor versus Fiber length (Km) without equalizer and with different equalizers at bit rate of 40Gb/s at typical dispersion value of 17ps/nm-km. This figure shows that with the increase in value fiber length, the Q factor improvement is more in RBF as compared to all other techniques of equalization.

V. CONCLUSION

It has been observed from the simulations performed that the RBF equalizer converges faster than the MLP in the training mode but need more computational time in the decision directed mode, because it requires large no. of neurons as compared to the other ANN based equalizers. It has been seen in above simulation result values, the RBF provides 99.9% improvement in BER for the OSNR variation of 10dB to 20dB which is more than the other techniques of equalization for nonlinearity compensation. It has been concluded form this study that the RBF based equalizers perform better than the other equalizers which are used for the compensation of nonlinearities in CO-OFDM system, especially at high SNR.

REFERENCES

[1] W. Shieh, H. Bao, and Y. Tang, "Coherent Optical OFDM: Theory and Design", *Opt. Express*, Vol.16, pp.842-859, Jan. 2008.
[2] E. Ip, A. Pak Tao Lau, D. J. F. Barros, and J. M. Kahn, "Coherent Detection in Optical Fiber Systems", *Opt. Express*, Vol.16, pp.753-791, Jan.2008.
[3] W. Shieh and I. Djordjevic, *OFDM for Optical Communications*, Elsevier, ch.7, 2010.
[4] S. H. Qureshi, "Adaptive equalization, " *Proceedings of the IEEE*, vol. 73, pp. 1349-1387, 1985.
[5] K.V. Peddanarappagari and M. Brandt-Pearce, "Volterra Series Approach for Optimizing Fiber-optic Communications System Designs", *J. of Lightwave Technol.*, Vol.16, pp.2046-2055, Nov.1998.
[6] L. Liu *et al.*, "Intrachannel nonlinearity compensation by inverse Volterra series transfer function, " *J. Lightw. Technol.*, vol. 30, no. 3, pp. 310–316, Feb. 1, 2012.
[7] E. Giacoumidis *et al.*, "Volterra-based reconfigurable nonlinear equalizer for coherent OFDM, " *IEEE Photon. Technol. Lett.*, vol. 26, no. 14, pp. 1383–1386, Jul. 15, 2014.
[8] L. Yao, W. A. Sethares and Y. H. Hu, "Identification of a Nonlinear System Modeled by Sparse Volterra Series", *IEEE Int. Conf. On Ser. Syst. Eng.*, pp.624-627, 1992.
[9] J. Pan and C. H. Cheng, "Wiener–Hammerstein Model Based Electrical Equalizer for Optical Communication Systems", *Journal of Lightwave Technology*, vol. 29, no. 16, August 15, 2011.
[10] P. Savazzi, L. Favalli, E. Costamagna, and A. Mecocci, "A suboptimal approach to channel equalization based on the nearest neighbor rule, " *IEEE J. Sel. Areas Commun.*, vol. 16, no. 9, pp. 1640–1648, Dec. 1998.
[11] M. Meyer and G. Pfeiffer, "Multilayer perceptron based decision feedback equalizers for channels with intersymbol interference, ". *IEE, Pt* IVol 140, No 6, , pp 420-424 Dec 1993.
[12] B. Mulgrew, "Applying Radial Basis Functions, " IEEE Signal Processing Magazine, vol. 13, pp. 50–65, March 1996.
[13] S. Chen, S. McLaughlin, and B. Mulgrew, "Complex-valued Radial Basis Function Network, Part I: Network Architecture and Learning Algorithms, " Signal Processing (Eurasip), vol. 35, pp. 19–31, January 1994.
[14] Gibson, G.J., S.Siu and C.F.N.Cowan, "Application of multilayer perceptrons as adaptive channel equalizer, " IEEE Int. Conf. Acoust., Speech, Signal Processing, Glasgow, Scotland, pp.1183-1186, 1989.
[15] S. Chen, S. McLaughlin, and B. Mulgrew, "Complex-valued Radial Basis Function Network, Part I: Network Architecture and Learning Algorithms, " Signal Processing (Eurasip), vol. 35, pp. 19–31, January 1994.
[16] Mutsam A. Jarajreh, Elias Giacoumidis et al., "Artificial Neural Network Nonlinear Equalizer for Coherent Optical OFDM", IEEE Photonics Tech. Letters, vol. 27, no. 4, February 15, 2015.